GIA

GIA REPORT
2181426541

Verify this report at gia.edu

**FACSIMILE**

This is a digital representation of the original GIA Report. This representation might not be accepted in lieu of the original GIA Report in certain circumstances. The original GIA Report includes certain security features which are not reproducible on this facsimile.

## GIA COLORED DIAMOND REPORT

May 25, 2017

Report Type .....Identification and Origin Report

GIA Report Number ..... 2181426541

Shape and Cutting Style ..... Round Brilliant

Measurements ..... 4.45 - 4.48 x 2.83 mm

Carat Weight ..... 0.35 carat

Color Grade ..... Fancy Deep Yellow

Color Origin ..... Natural

Color Distribution ..... Even

Inscription(s): GIA 2181426541

## ADDITIONAL INFORMATION

GIA COLORED DIAMOND SCALE

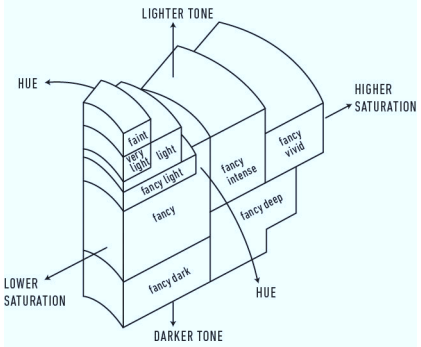


Illustration of GIA fancy color grade interrelationships

The results documented in this report refer only to the diamond described, and were obtained using the techniques and equipment used by GIA at the time of examination. This report is not a guarantee or valuation. For additional information and important limitations and disclaimers, please see www.gia.edu/terms or call +1 800 421 7250 or +1 760 603 4500. ©2014 Gemological Institute of America, Inc.

reportcheck.gia.edu



THE SECURITY FEATURES IN THIS DOCUMENT, INCLUDING THE HOLOGRAM, SECURITY SCREEN AND MICROPRINT LINES, IN ADDITION TO THOSE NOT LISTED, EXCEED DOCUMENT SECURITY INDUSTRY GUIDELINES.